REFRIGERATOR MANUFACTURER
Turbo air
more durable, efficient, beautiful

4184 E. Conant St.
Long Beach, CA 90808
Tel. 310-900-1000
Fax. 310-900-1077
www.turboairinc.com

Project:	
Model #:	
Item #:	
Available W/H:	Qty:
Approval:	
AIA #:	SIS #:
CSI Section 11400	

Narrow Back Bars

Underbar Equipment
Super Deluxe Series

Model : TBB-24-60SBD-N6
TBB-24-60SGD-N

TBB-24-60SGD-N

TBB-24-60SBD-N6

FEATURES & BENEFITS

- ***Equipped with easy-to-clean Air Filter***
  The accumulation of dust in the condenser causes failures or breakdowns in refrigeration. Refrigeration operate normally until they accumulate a certain amount of dust. When they reach their limit, performance will drop rapidly, resulting in damages and possible disposal of stored goods. This is why all refrigeration manufacturers require the condenser to be cleaned at least once a month for warranty to remain valid. With Turbo Air, this process is simple and easy due to the frontal access air filter device. Pull out the filter and vacuum lightly to remove the dust. Place it back into position when complete.
- ***Hydrocarbon refrigerants (R-290 / R-600a)***
  With innovative and eco-friendly technology, Turbo Air brings you hydrocarbon refrigerators designed to meet DOE's Energy Conservation Standards in 2017 and to use EPA's SNAP Program approved HC refrigerants. Hydrocarbon refrigerants do not deplete the ozone layer and have very low contribution to global warming (ODP-0, GWP-3).
- ***Ergonomically designed doors***
  Customers' fatigue fades away with easy grip handles and doors that open effortlessly. These features along with self-closing doors make this the ultimate choice in customer convenience.
- ***Stainless steel countertop and interior***
  The exterior of the cabinet is constructed with heavy gauge reinforced stainless steel countertop and wear-resistant black vinyl coated galvanized steel. The interior is painted galvanized steel with reinforced stainless steel floor. Turbo Air Back Bar model guarantees the utmost in cleanliness and long product life. It also adds a touch of style to the most refined setting.
- ***Digital Temperature Controller***
  External digital temperature control has an easily accessible panel to quickly adjust temperatures, which includes a defr ost control.
- ***Forced air cooling system***
  Fast cooling and balanced temperature throughout the cabinet.
- ***LED interior lighting***
- ***Double pane glass doors with Low-E glass (SGD Models)***
- ***High-density polyurethane insulation***
  The entire cabinet structure is foamed-in-place using high density, HCFC free polyurethane insulation.
- ***Adjustable, heavy duty, PE (polyethylene) coated wire shelves***
- ***Side mount compressor unit***
  With compressors positioned on the side of the unit, our refrigerators can now be serviced without being moved. Our innovative, front air intake feature also allows this model to be highly efficient in narrow spaces.
- ***Refrigerator holds 33°F ~ 38°F for the best in beverage preservation***

NATURAL Refrigerant · SPEC ISO 9001:2008 · Intertek · Intertek · 3 YEAR · Compressor 7 YEAR WARRANTY (U.S.A. only) · ENERGY STAR® Qualified

Model	Swing Doors	CU./FT.	1/2 Barrels	#of Shelves	HP	AMPS	Crated Weight (lbs.)	L x D* x H† (inches)
TBB-24-60SBD-N6	2	16.46	2	4	1/5	2.0	279	61 1/8 x 24 1/2 x 35 3/8
TBB-24-60SGD-N	2	16.46	2	4	1/3	2.9	307	61 1/8 x 24 1/2 x 35 3/8

Ver.20220630 Printed in U.S.A.

* Depth does not include 3/8" (SBD) / 1-1/2" (SGD) for door handles. Depth does not include 1-1/4" for rear spacers. † Height does not include 3-1/8" for caster height.

Narrow Back Bars

Underbar Equipment
Super Deluxe Series

Model : TBB-24-60SBD-N6, TBB-24-60SGD-N

ELECTRICAL DATA		
Voltage		115/60/1
Plug Type		NEMA 5-15P
Full Load Amperes		2.0 (SBD) / 2.9 (SGD)
Compressor HP		1/5 (SBD) / 1/3 (SGD)
Refrigerant		R-600a (SBD) / R-290 (SGD)
Cord Length (ft.)		8.5
Lamp (W)		9
DIMENSIONAL DATA		
Capacity	1/2 Barrels	2
	cu. ft.	16.46
Ext. Length Overall (in.)		61 1/8 (1553mm)
Ext. Depth Overall (in.)*		24 1/2 (623mm)
Ext. Height Overall (in.)†		35 3/8 (900mm)
# of Swing Doors		2
# of Shelves		4
Shelf size (L x D) (in.)		22 7/8 x 18
# of Casters		6EA
Net Weight (lbs.)		236 (SBD) / 265 (SGD)
Gross Weight (lbs.)		279 (SBD) / 307 (SGD)

Design and specifications subject to change without notice.
Actual shipping weight may differ due to extra packing materials for product protection.
*Depth does not include 3/8" (SBD) / 1-1/2" (SGD) for door handles.
Depth does not include 1-1/4" for rear spacers.
† Height does not include 3-1/8" for caster height.

WARRANTY : 3 Year Parts and Labor Warranty
Additional 4 Year Warranty on Compressor

STANDARD FEATURES

- ***Anti-corrosion coated evaporator***
- ***Self-contained system***
- ***2.5" dia. swivel casters with locks on the front set***
- ***Door locks***

OPTIONAL ACCESSORIES

- 1" caster, ½" diameter & 13 TPI: S28R813660 (non-brake)
- 2" caster for underbar series, ½" diameter: P0165B0100 (non-brake), P0165B0110 (w/ brake)
- 5" caster, ½" diameter & 13 TPI: M726500100 (non-brake), M726500200 (w/ brake)
- Leveling leg, ½" - 13 TPI x 1.54": LFM1213566
- 6" adjustable stainless steel leg: P0121P0100
- Additional PE coated wire shelf: P0178S0410

PLAN VIEW

(unit : inch)

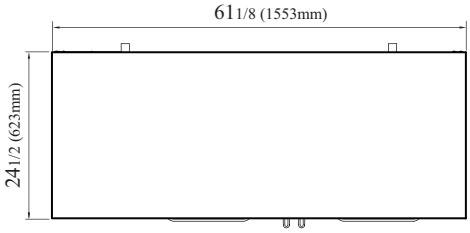

TOP VIEW

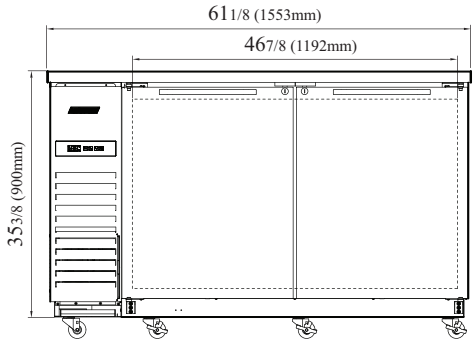

TBB-24-60SBD-N6 FRONT VIEW

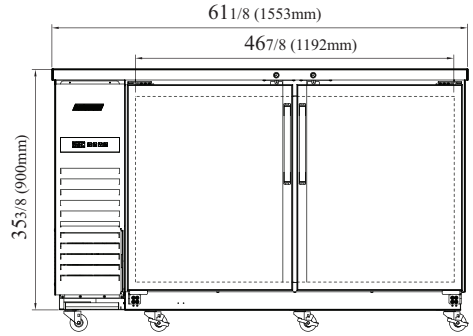

TBB-24-60SGD-N FRONT VIEW

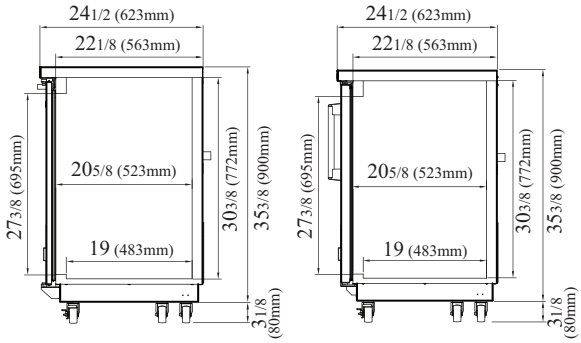

TBB-24-60SBD-N6 & TBB-24-60SGD-N SIDE VIEW

Ver.20220630

NATURAL Refrigerant · SPEC ISO 9001:2008 · Intertek · Intertek · 3 YEAR · Compressor 7 YEAR WARRANTY (U.S.A only) · ENERGY STAR® Qualified

- **Turbo Air** : 800-627-0032
- **GK** : 800-500-3519
- **Warranty** : 800-381-7770
- **AC** : 888-900-1002

Turbo air · German Knife · Radiance · Turbo air · Texaking

Continued product development may necessitate specification changes without notice.